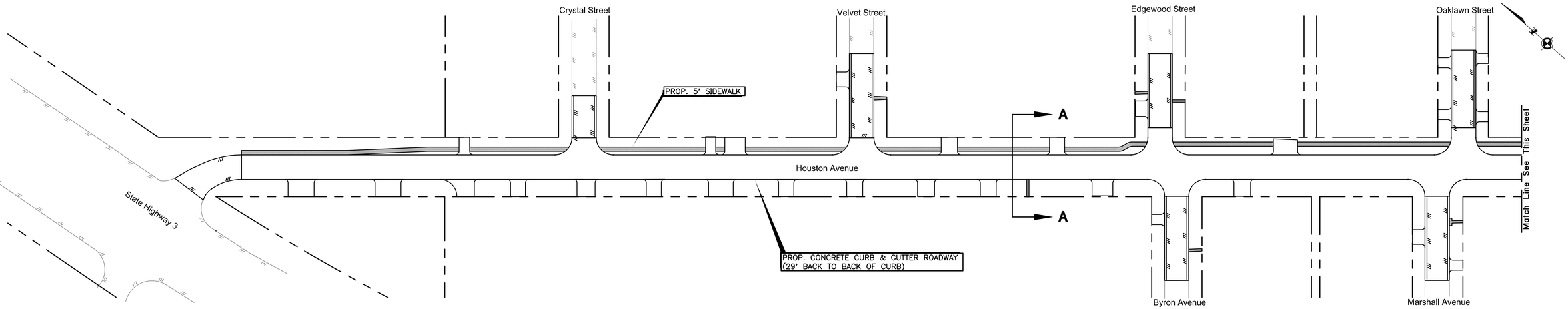

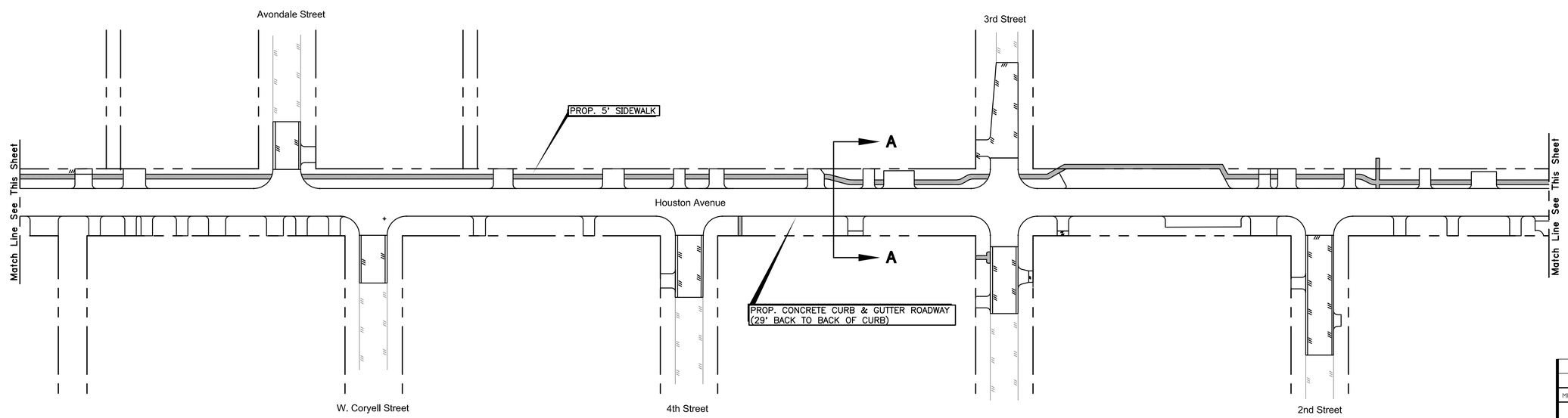

LEGEND:

PROPOSED SIDEWALK

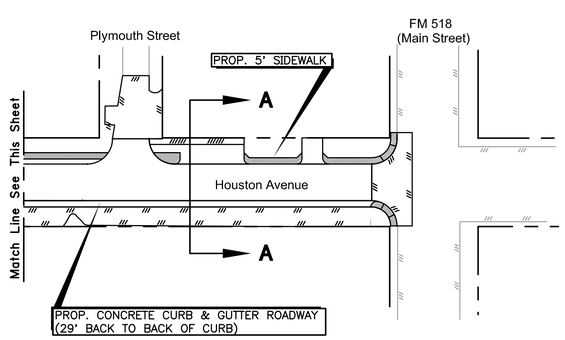

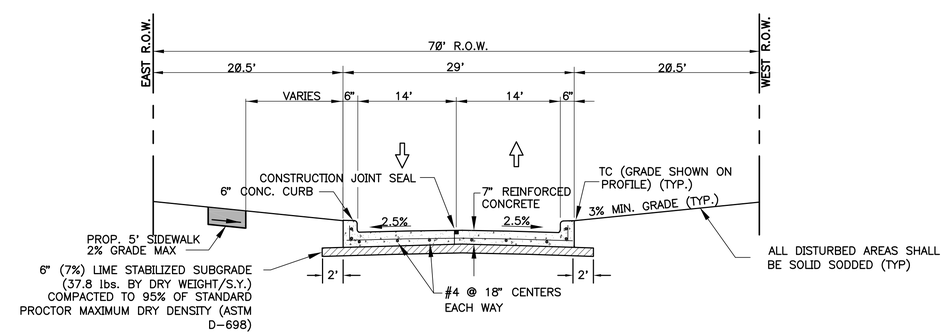

HOUSTON AVENUE TYPICAL SECTION (7" CONCRETE)

NOT TO SCALE

SECTION A-A

MK.	DESCRIPTION	DATE	DWN.	CHK.

FOR REVIEW ONLY
AUGUST, 2010
JOHN D. RUDLOFF
TX. REG. 83386
NOT FOR BIDDING OR CONSTRUCTION

HDR | CLAUNCH & MILLER
Engineering Consultants
4635 Southwest Freeway, Suite 1000 • Houston, Texas 77027
(713) 622-9264 • Fax (713) 622-9265 • www.clauncheminiller.com
HDR Engineering Inc. Texas Reg. No. F-754

City of League City, Texas

Houston Avenue Paving, Drainage, and Utility Improvements Project

Overall Paving & Sidewalk Layout

Job No.: 10-019	Scale: 1"=60'	SHEET
Date: August 2010	HORZ: VERT: ONE INCH	5B
Dwn By: D Fattig	IF ABOVE MARK DOES NOT MEASURE ONE INCH, THEN THIS DWG. NOT TO SCALE	OF 95
Chkd By: D. Jorgensen		